Fuel Receiver Gauge Malfunction

WIRING DIAGRAM

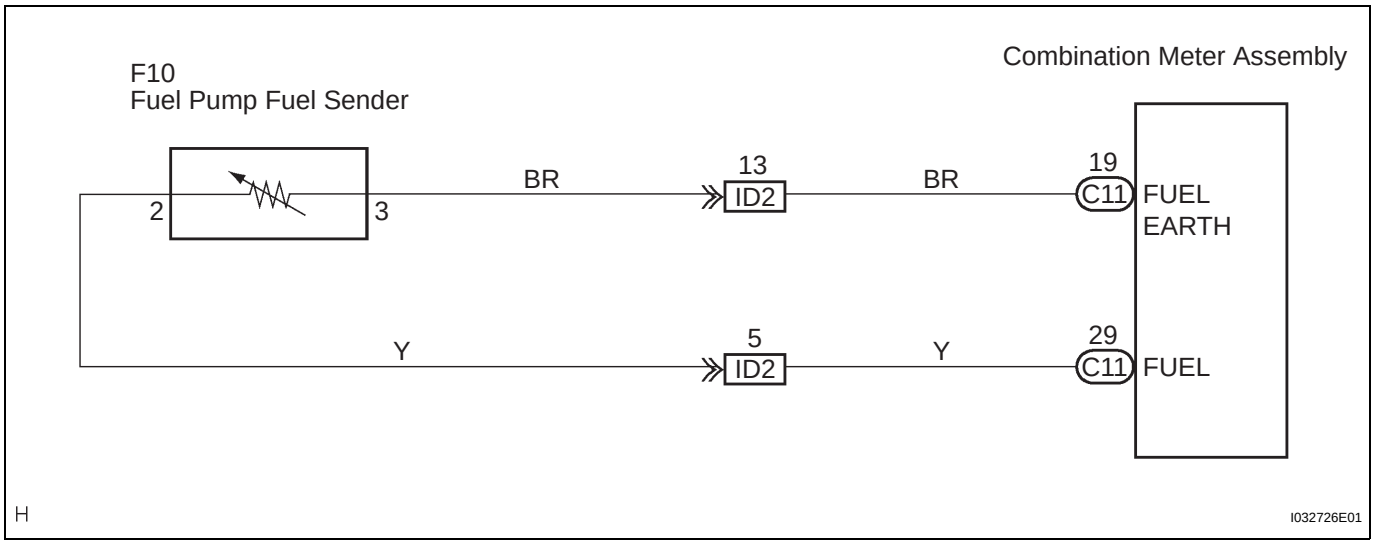

INSPECTION PROCEDURE

1	CHECK HARNESS OR CONNECTOR

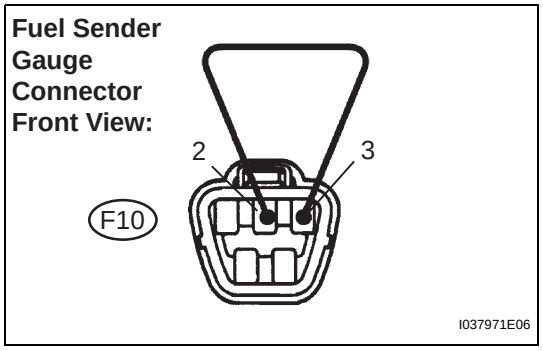

(a) Disconnect the F10 connector from the fuel sender gauge assembly.

(b) Check the meter indicator conditions according to the table below.

Standard

Wire connection	Condition	Specified condition
2 - 3	Short circuit (Ignition switch ON)	Fuel gauge indicates "F" or more (Combination meter)

(c) Measure the voltage according to the value(s) in the table below.

Standard voltage

Tester connection	Condition	Specified condition
2 - Body ground	Ignition switch ON	10 to 14 V

NG → **Go to step 3**

OK

2	INSPECT FUEL SENDER GAUGE ASSEMBLY

(a) Remove the fuel sender gauge assembly.

ME
cardiagn.com

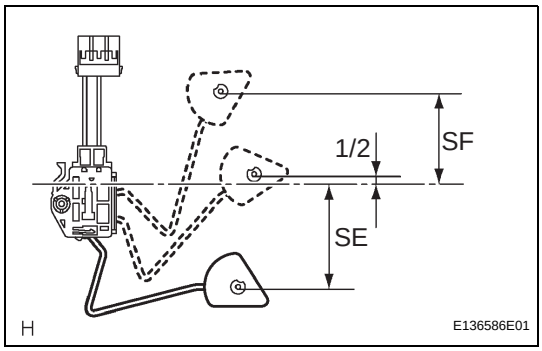

(b) Check that the float position is between E and F.

Fuel Sender Gauge Connector Front View:

(c) Measure the resistance between terminals 2 and 3 of the connector according to the value(s) in the table below.
Standard resistance

Float level	Float position mm (in.)	Resistance (Ω)
SF	50.4 (1.98) +/- 3 (0.12)	15.0 +/- 1.5
1/2	3.6 (0.14) +/- 3 (0.12)	213.0 +/- 13.0
SE	56.7 (2.23) +/- 3 (0.12)	410.0 +/- 4.5

NG → **REPLACE FUEL SENDER GAUGE ASSEMBLY**

OK

REPLACE COMBINATION METER ASSEMBLY

ME

cardiagn.com

3	**CHECK HARNESS AND CONNECTOR (FUEL SENDER GAUGE ASSEMBLY - COMBINATION METER)**

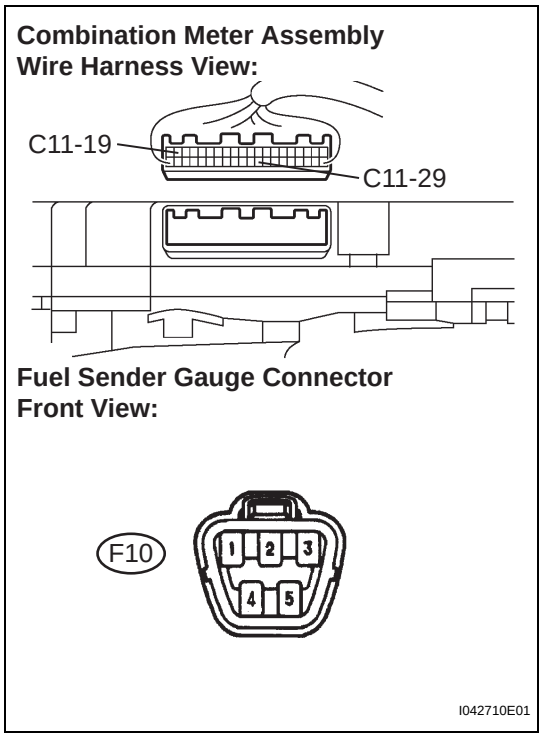

(a) Disconnect the C11 and F10 connectors.
(b) Measure the resistance according to the value(s) in the table below.

Standard resistance

Tester connection	Condition	Specified condition
C11-29 - F10-2	Always	Below 1 Ω
C11-19 - F10-3	Always	Below 1 Ω

NG → **REPAIR OR REPLACE HARNESS OR CONNECTOR**

OK

REPLACE COMBINATION METER ASSEMBLY

ME

cardiagn.com